DOSATRON®

WATER POWERED DOSING TECHNOLOGY

ISO 9001 : 2000
Quality System Certified

NT / Compact / GB/0607

MANUFACTURED BY - FABRIQUÉ PAR :

DOSATRON INTERNATIONAL S.A.

Rue Pascal - B.P. 6 - 33370 TRESSES (BORDEAUX) - FRANCE
Tel. 33 (0)5 57 97 11 11
Fax. 33 (0)5 57 97 11 29 / 33 (0)5 57 97 10 85
e.mail : info@dosatron.com - http://www.dosatron.com

This document does not form a contractual engagement on the part of Dosatron International and is for information only. Dosatron International reserves the right to alter product specification or appearance without prior notice. © DOSATRON INTERNATIONAL S.A. 2004.

DOSATRON®

WATER POWERED DOSING TECHNOLOGY

0.7 m³/h - 3 GPM

D 07 RE 125
D 07 RE 5

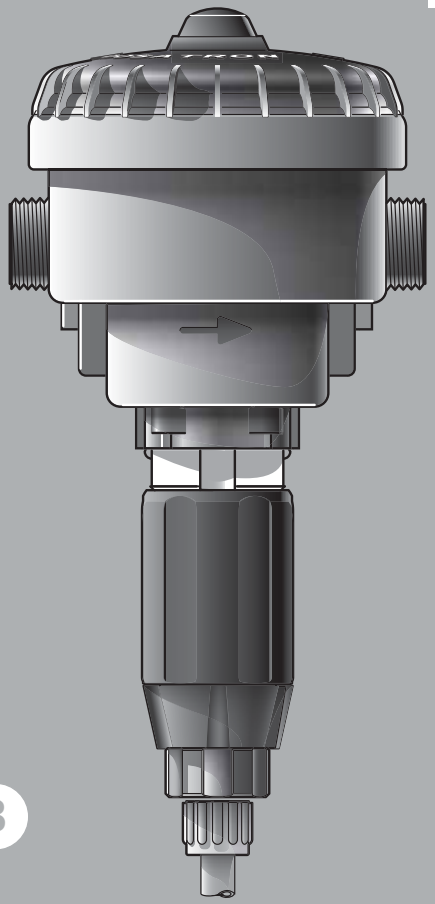

owner's manual

GB

DOSATRON®

WATER POWERED DOSING TECHNOLOGY

CUSTOMER SERVICE
SERVICE CLIENTÈLE:

WORLDWIDE - EUROPE :
DOSATRON INTERNATIONAL S.A.

Rue Pascal - B.P. 6 - 33370 TRESSES (BORDEAUX) - FRANCE
Tel. 33 (0)5 57 97 11 11
Fax. 33 (0)5 57 97 11 29 / 33 (0)5 57 97 10 85
e.mail : info@dosatron.com - http://www.dosatron.com

NORTH & CENTRAL AMERICA :
DOSATRON INTERNATIONAL INC.

2090 SUNNYDALE BLVD. CLEARWATER - FL 33765 - USA
Tel. 1-727-443-5404 - Fax 1-727-447-0591
Customer Service: 1-800-523-8499
e.mail : mail@dosatronusa.com - http://www.dosatronusa.com

You have just become the owner of one of the latest in the line of DOSATRON proportional dosing pumps and we congratulate you on your choice.
The development of this model is the result of over 30 years experience. Our engineers have placed the DOSATRON series at the forefront of technical development in the field of non-electric proportional dosing pumps.
The choice of materials used in manufacture was most meticulous in order to resist chemical attack from the great majority of injectable products on the market. This DOSATRON will, as time goes by, prove itself to be a most faithful ally.
A little care and attention, regularly spent, will guarantee you an operation in which the word breakdown has no place.

PLEASE, THEREFORE, READ THIS MANUAL CAREFULLY BEFORE PUTTING THE DOSATRON INTO OPERATION.

Important !
The complete model reference and the serial number of your DOSATRON is stamped **on the pump body.**
Please record this number in the space below and refer to it when you call your distributor for information, parts, and service.

Ref. # .....

Serial # .....

Purchase Date .....

....

SPECIFICATIONS

	D 07 RE 125	D 07 RE 5
Practical operating **flow range***: *For operating unit with other fluids than water, please contact us.	**5 l/h mini - 700 l/h maxi** [0.022 US GPM- 3 US GPM]	
Operating **pressure**:		
bar	**0.30 - 6**	**0.30 - 6**
PSI	4.3 - 85	4.3 - 85
Externally adjustable injection rate:		
%	**0.15 - 1.25**	**0.8 - 5.5**
ratio	1 : 666 - 1 : 80	1 : 128 - 1 : 20
Concentrated additive injection:		
Mini l/h - Maxi l/h	**0.0075 - 8.75**	**0.8 - 38.5**
US Fl. oz/min	0.0042 - 5	0.45 - 21.8

Package contents: 1 Compact Dosatron - 1 mounting bracket - 1 transparent suction tube 175 cm long [69"], ø 6 x 9 mm [1/4"id x 3/8" od] - 1 owner's manual **Package size: 16 x 33 x 18.5 cm** (6 5/16" x 13" x 7 1/4"]) - **Package weight: 1 kg** [2.2 us lbs]

GENERAL

Maximum operating water temperature:	**40°C** [104°F] for operating the unit with higher temperatures, please contact us.
Minimum operating water temperature:	**5°C** [41°F]
Dosing rate:	i.e. Adjustment at 1% = 1 : 100 = 1 V concentrate into 100 V water
Average dosing accuracy:	+/- 5% (charts on demand)
Repeatability:	+/- 3% (API Standard)
Pressure loss:	**0.3 – 1.4 bar** [4.3 – 20.3 PSI]

OTHER INTEGRATED FUNCTIONS

Inlet/outlet connections:	**3/4" M : BSP-NPT ø 20 x 27 mm**
Built-in airbleeder:	**yes**

MOTOR

Motor :	**hydraulic piston**
Hydraulic motor capacity:	**0.225 l** [0.059 US Gallons] (1 cycle)

DOSING

Injection :	**internal**
Dosing plunger:	**simple effet, injection on the upstream**
Injection check valve:	**spring-loaded cone**

SUCTION

Self-priming:	**yes**
Maximim viscosity of concentrate:	**400 cSt at 20°C** [68°F]
Max. vertical or horizontal suction of the concentrate:	**4 m** [13ft]
Strainer:	**yes** – foot strainer with weight

STANDARD MATERIAL

Housing: polypropylene, EPDM
Motor piston: polypropylene, peek, stainless steel, teflon, EPDM HT
Injection area: polypropylene, polyethylene, hastelloy (check valve spring)
Injection hose: PVC

AVAILABLE OPTIONS

■ : option ● : standard ★ : not available for this model

Optimized compatibility

- ■ **AF :** Recommended seals for alkaline concentrate
- ■ **VF :** Recommended seals for acid concentrate
- ■ **Injection hose:** Special material hose and foot strainer available

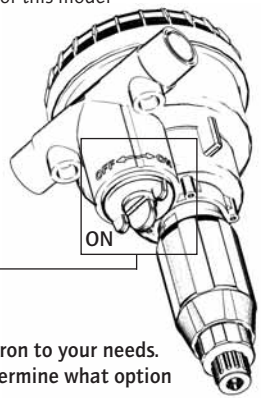

Optimized installation

- ■ **BP :** integrated by-pass
- ■ **Other:** please contact us

These options allow adapting your Dosatron to your needs. Contact our technical service to help determine what option you may need.
Each Dosatron unit is factory tested.

NOTA

The Dosatron Compact is equipped with a security valve integrated in the Dosatron inlet, which will open and let the water flow through in case of inopportune stopping of the motor. This security-"bypass" needs a differential pressure of 1.5 bar [21 PSI] below which the valve will not operate.

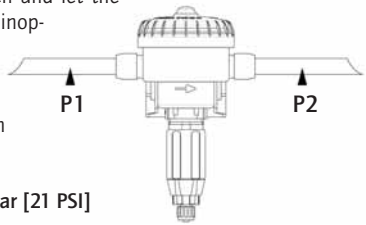

Pressure 1 - Pressure 2 ≥ 1.5 bar [21 PSI]

Precise, simple and reliable

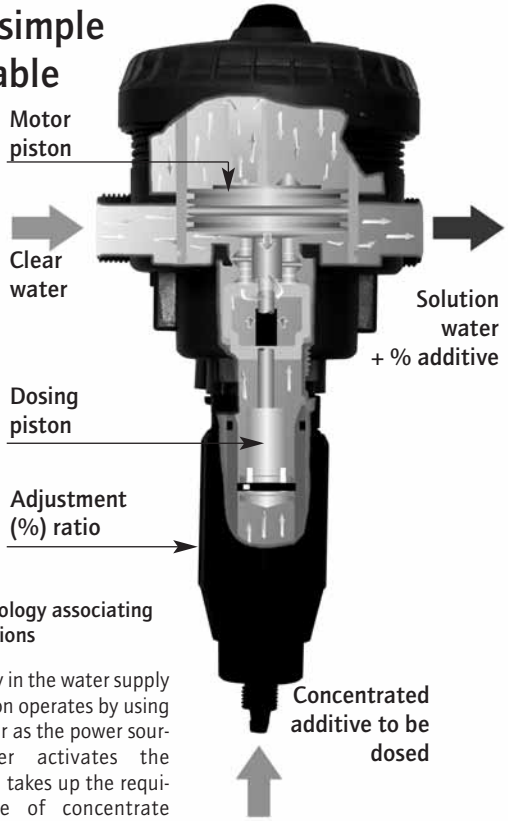

A unique technology associating all dosing functions

Installed directly in the water supply line, the Dosatron operates by using the flow of water as the power source. The water activates the Dosatron, which takes up the required percentage of concentrate directly from the container and injects it into the water. Inside the Dosatron, the concentrate is mixed with the water, and the water pressure forces the solution downstream. The dose of concentrate will be directly proportional to the volume of water entering the Dosatron, regardless of variations in flow or pressure, which may occur in the main line.

PRECAUTIONS

1 - GENERAL REMARKS

- When connecting a DOSATRON either to the public water supply or to its own water source, you must respect the regulations in force concerning protection of the source i.e. backflow prevention, etc.

- When installing a Dosatron Compact, check that the bypass is on the "ON"-position.
- The Dosatron Compact is equipped with a security valve integrated in the Dosatron inlet, which will open and let the water flow through in case of inopportune stopping of the motor. This security-"bypass" needs a differential pressure of 1.5 bar below which the valve will not operate.
- Install the Dosatron Compact taking into consideration the direction of the water flow (arrow on the pump body), otherwise the security valve might move and damage the dosing unit.
- In a case where the water installation is higher than the DOSATRON itself, there is a possible risk of water and concentrate flowing back through the DOSATRON. In this case, installing a non-return valve downstream is recommended.
- Do not install the DOSATRON just above an acid container, (risk of acid fumes attacking the DOSATRON) and protect it from possible contact with corrosive products.
- Protect the DOSATRON from freezing temperatures by draining it and store it away from sources of excessive heat.
- Do not install the DOSATRON on the suction side of the supply pump (risk of siphoning).
- During any intervention the operator must stay in front of the DOSATRON and wear protective eyewear and gloves.
- Turn off the water supply and allow the pressure to drop to zero before adjusting the injection rate.
- It is the responsibility of the owner/operator to replace the injection seals annually to ensure precise injection.
- The setting of the Dosatron's dosing rate is the sole responsibility of the user. The user has to respect the recommendations given by the manufacturer of the chemical product.
- It is the responsibility of the owner/operator to check that the flow and pressure of the installation do not exceed the DOSATRON characteristics.
- It is the responsibility of the owner/operator of the DOSATRON, to determine the correct amount of solution and injection ratio to obtain the desired result.
- An air inlet, an impurity or a chemical attack on seal can interrupt the

PRECAUTIONS (cont...)

dosing function. It is recommended to periodically check that the solution is being correctly drawn up into the DOSATRON.
- Change the suction tube as soon as it seems damaged by the chemical.
- Relieve the pressure after use (advised).
- Rinsing of the DOSATRON is required :
. when changing chemicals,
. before handling the DOSATRON, to avoid any contact with the chemical.
- Before applying any aggressive chemicals, please consult your distributor to confirm compatibility with the dosing pump.
- All assembly should be done without tool, hand tighten only.

2 - WATER WITH HIGH PARTICLE CONTENT

- A (ex.: 300 mesh - 60 microns depending on your water quality) water filter must be installed prior to the DOSATRON (see accessories), if a filter is not installed abrasive substances will cause the DOSATRON to deteriorate prematurely.

3 - WATER-HAMMER / EXCESSIVE FLOW

- For installations subject to water hammer a protection device such as a check valve or union ball check must be fitted (pressure/flow control system).
- For automatic installations, slow opening and closing solenoid valves are preferable.
- In an installation where a DOSATRON serves several sectors, the closing of one sector and the opening of another sector must be done at the same time (simultaneous operation of the solenoid valves).

4 - INSTALLATION LOCATION

- The location of the DOSATRON and concentrate container should be accessible, but should never present a risk of pollution or contamination.
- It is recommended to label all water lines with a warning about the injected solution i.e. Not For Human Consumption.

5 - MAINTENANCE

- Rinse the injection areas after using the DOSATRON. To do this, insert suction tube into container of clean water and inject about a 1/4 liter [8 1/2 US Fl.oz].
- Routine maintenance once a year will add to the life of your DOSATRON. Change the dosing seals at least once a year, depending on its use.

6 - SERVICE

- This DOSATRON was tested prior to packaging.
- Complete maintenance and seal kits are available.
- Call your DOSATRON distributor for service or parts.

PREMIÈRE MISE EN SERVICE

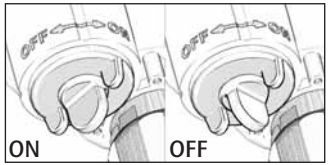

ATTENTION: Check that the bypass is in "ON"-position.
- Partially open the water inlet valve.
- Press the bleed button on the top of the DOSATRON.
- When a constant flow of water is seen coming from around the bleed button (no more "spitting" of air), release the button.

- Open the water inlet valve slowly, the DOSATRON is self-priming.
- Operate the DOSATRON until the product to be injected is drawn up into the injection part (the product is visible through the plastic tube).

- The DOSATRON makes a characteristic "click-clack" noise when working.
NOTE: The time required to prime the suction tube depends on the water flow-rate, the ratio setting and the length of the suction tube. To bleed the air from the suction tube and accelerate the priming, set the injection rate at maximum. Once the DOSATRON is primed, adjust to the required injection rate (see § ADJUSTING THE INJECTION RATE).

ADJUSTING THE INJECTION RATE

IMPORTANT ! Use no tools
Adjustment must be made when there is no pressure in the Dosatron.
- Turn off the water supply and allow the pressure to drop to zero.
- Unscrew the blocking ring.
- Screw or unscrew the adjusting nut so as to bring the top of the nut into line with the desired injection rate.
- Tighten the blocking ring.

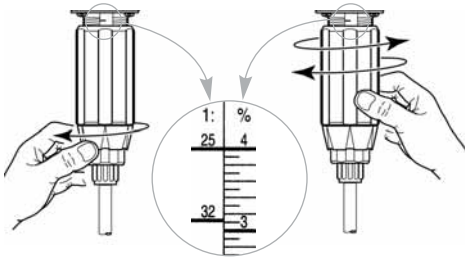

PARTS DIAGRAM D 07 RE 125 - N° SÉRIE 06151086 ⇨

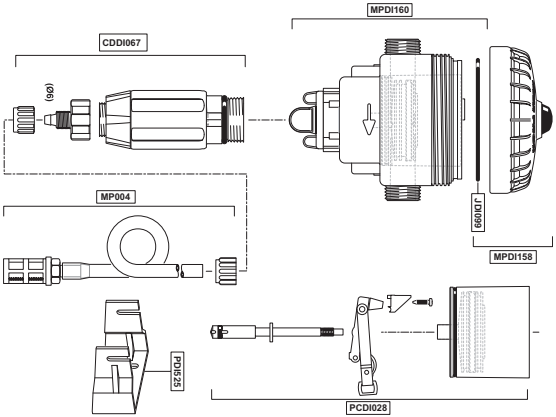

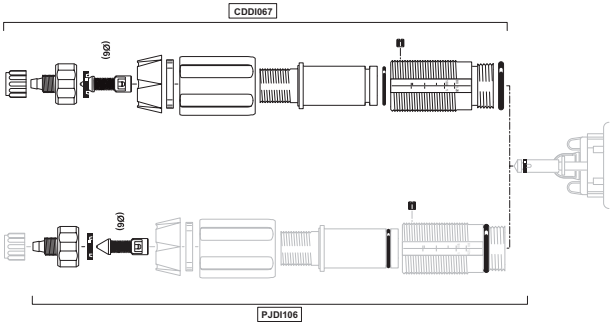

PARTS DIAGRAM D 07 RE 5 - N° SÉRIE 06150268 ⇨

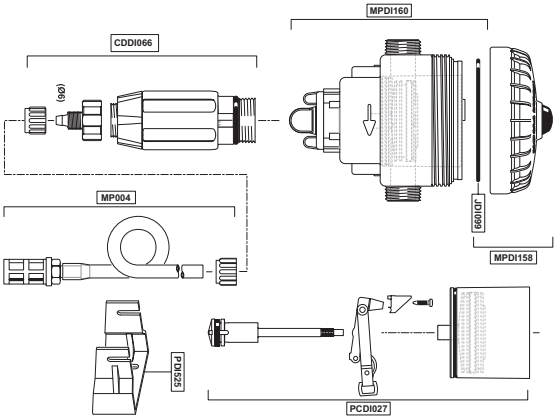

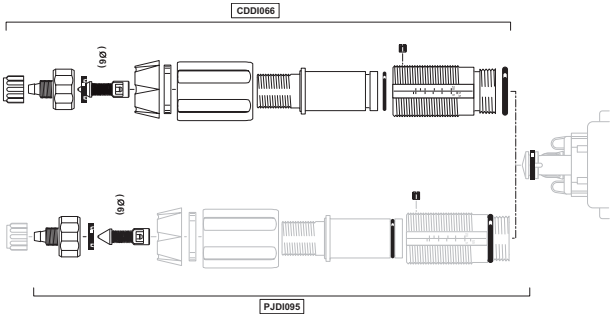

Troubleshooting

Note: the Dosatron Compact is equipped with a security valve integrated in the Dosatron inlet, which will open and let the water flow through in case of inopportune stopping of the motor. This security-"bypass" needs a differential pressure of 1.5 bar below which the valve will not operate.

SYMPTOM	CAUSE	SOLUTION
Motor piston		
DOSATRON does not start or stops	The Dosatron is not on "ON"	Put the button on "ON"
	Air has not been bled from unit	Bleed air from unit, by bleed button
	Maximum flow exceeded.	1. Reduce flow, restart unit 2. Return the Dosatron to your distributor
	Motor piston stalled or damaged	Return unit to your service center for repair
	Leak at the security valve	1. Check or clean the valve seal 2. Return the Dosatron to your distributor
No water at the outlet	Network pressure is not sufficient	Increase the pression to more than 0.3 bar
Injection		
Water flowing back into concentrate container	Contaminated, worn, or missing check valve parts	Clean or replace them
No suction of concentrate	The motor piston has stopped	See **motor piston** section
	Air leak (inlet) in the suction tube	Check the tightness between nut and suction hose
	Blocked suction tube or clogged strainer	Clean or replace it
	Missing or worn suction check valve seal	Clean or replace it

SYMPTOM	CAUSE	SOLUTION
Injection		
No suction of concentrate	Missing or worn plunger seal	Clean or replace it
	Worn injection stem	Replace it
Under injection	Suction of air	1. Check the tightness of the nuts in the injection area 2. Check suction tube
	Dirty or worn check valve seal.	Clean or replace it.
	Maximum flow exceeded (cavitation)	Reduce flow
	Worn plunger seal	Replace it
	Worn injection stem	Replace it
Leaks		
Leaks between motor part and injection part	Injection sleeve seal is damaged or positioned incorrectly	Replace it
Leaks between the adjusting nut and the blocking ring	Injection stem seal damaged, positioned incorrectly or missing	Replace it
Leaks between pump body and top cap	Top cap seal is damaged, positioned incorrectly or missing	Unscrew the top cap, clean the seal seating, replace or change the seal. Position correctly the top cap.

THE MANUFACTURER DECLINES ALL RESPONSIBILITY IF THE DOSATRON IS USED IN CONDITIONS THAT DO NOT CORRESPOND TO THE OPERATING INSTRUCTIONS AS INDICATED IN THIS MANUAL.

Limited warranty

DOSATRON INTERNATIONAL S.A. will provide for replacement of all parts shown to be defective in material or workmanship during a period of twelve months from the date of purchase by the original purchaser. To obtain warranty replacement of a part, the DOSATRON must be returned with original proof of purchase receipt to the manufacturer or authorized distributor and thereafter recognized as defective after examination by the technical services of the manufacturer or distributor. The DOSATRON must be flushed of any chemical and sent to the manufacturer or distributor prepaid, but will be returned free of charge once repairs are made if found to be covered by the warranty. Any repairs made under warranty will not extend the initial warranty period.

This warranty only covers circumstances where the part has failed due to defects caused by the manufacturing process. This warranty is invalid if the defects are found to be due to the product's misuse, inappropriate use of tools, lack of maintenance or defective installation or environmental accidents or corrosion by foreign bodies and liquids found within or in proximity to the DOSATRON. Before using any aggressive chemicals, please consult your distributor to confirm compatibility with the dosing pump.

The seals and "o-rings" are not covered under warranty, nor is damage to the DOSATRON caused by water impurities such as sand. A filter (ex.: 300 mesh - 60 microns depending on your water quality) must be used in front of the DOSATRON for the warranty to be valid. DOSATRON INTERNATIONAL S.A. declines any responsibility if the DOSATRON is not used in compliance with the operating instructions and tolerances as indicated in this owner's manual.

This warranty gives you specific legal rights and you may also have other rights which vary from state to state. But any implied warranty or merchantability or fitness for a particular purpose applicable to this product is limited in duration to the time period of this written warranty or any implied warranty.

There is no warranty express or implied relating in any way to products used in conjunction with DOSATRON INTERNATIONAL S.A. products.

The manufacturer or authorized distributor shall not be liable for incidental or consequential damage, such as any economic loss, resulting from breach of this written warranty or any implied warranty.

There are no warranties, express or implied, which extend beyond those described above.

This document does not form a contractual engagement on the part of DOSATRON INTERNATIONAL and is for information only.

The company DOSATRON INTERNATIONAL reserves the right to alter product specification or appearance without prior notice.